SUZOHAPP

COMESTERO
a SUZOHAPP company

RM5 HD

Electronic Coin Validator

EN

Operating Manual

Cod. DMGEH00001.3.2EN **Rel. 1.3.2 27 – 10 – 2015**

CE

GUIDE TO THE SYMBOLS IN THIS MANUAL

The following symbols have been included in this manual to facilitate its consultation.

EN

Important information

Read carefully before use

Caution!

DECLARATION CE OF CONFORMITY

THE MANUFACTURER: Comestero Group S.r.l. via M. Curie 8, 20060 Gessate MI

DECLARES

That the product:RM5HD

TYPE: Electronic coin mechanism
BRAND: Comestero
MODEL: RM5HD

Is conform to the following European Directives, including their latest amendments, as well as to the national implementation legislation:

2004/108/CEE

Observing the following indications:

EN 61000-6-2
EN 61000-6-3
IEC60950-1:2005 + AMD1:2009 + AMD2:2013
IEC60950-22

Gessate, 04/06/2009
Riccardo Chionna, CEO Comestero Group s.r.l.

SAFETY INFORMATION

To prevent damages caused by short circuits and fires, this device is equipped with safety devices.

These devices must not, under any circumstance, be excluded from the circuit, nor must they be removed.
Should they be deactivated to carry out maintenance or repair operations, it is possible to operate on the equipment only in absence of electric power.

The safety devices have been made in compliance with the regulations in force.
The operator must regularly verify the efficiency of the equipment.

Possible hazards from machine use

If kept in good conditions and if installed correctly (according to the indications in this manual), the equipment does not expose the user to any kind of hazards.

Risks from electricity: direct contacts during its connection to the main power supply.
Operations to be carried out by qualified personnel.

Risks during installation and preparation of the device.

Follow the installation instructions, in order to minimise risks to people and objects.

Risks from electricity: direct contacts during its connection to the main power supply. Operations to be carried out by qualified personnel.

Precautions :

- Make sure that the distribution line is sized according to the intensity of the current absorbed by the equipment.
- Carry out the earth connection before connecting equipment or aggregate devices.

Risks during the maintenance of the device

Risks from electricity: direct contact with live parts inside the electrical components cabinet.
Operations to be carried out by qualified personnel.

Precautions :

- Operate on the equipment only after ensuring that the main power switch is turned OFF.

GENERAL WARRANTY

Please read the following carefully in order to understand the general warranty conditions for this product.

ART. 1 - Scope of application

These general terms and conditions shall apply to all the goods and services provided by our company. Placed orders shall imply the full and unconditional acceptance of these general terms and conditions of sale. The contract of sale shall be considered perfected when the Purchaser receives the order confirmation from the Seller.

ART. 2 - Electromagnetic compatibility and safety

Our company certifies that the supplied goods comply with the standards concerning electromagnetic compatibility and safety; mandatory declarations are indicated in detail in the plates and labels affixed on the products and in the technical documentation attached or available at our premises. The recipients of the supply undertake to use or market the supplied goods, ensuring the integrity, completeness and usability of such information.

ART. 3 – Warranty

Except in cases where the mandatory provisions in Leg. Decree No. 206/2005 ("Consumer Code") or in other relevant laws are to be applied, the goods and services are supplied under warranty by our company for a period of 12 months. This period starts from the date of purchase of the product. The warranty is exclusively limited to the normal operation of the goods supplied and to the result of the service provided. The warranty exclusively involves the repairs or replacement of the goods. Restoration of the goods to their normal operative state shall be carried out in our factory. Although not provided for here, Art. 1512 CC is also applicable in terms of revocation and limitation.
Our company shall not be liable in any way for operation of goods supplied in environmental conditions or technical conditions other than those established by our specifications, usually set out in the technical documentation. Any liability for direct or indirect damage not deriving from a malfunction is expressly excluded.

The warranty is void and null if the purchaser is insolvent in paying the established price.
The warranty does not apply in the following cases:

1. lack of or improper maintenance, even if carried out by qualified personnel;
2. repairs or alterations made by the purchaser on his unilateral initiative;
3. inadequate or irregular voltage in the power lines, insufficient flow rate and abnormal electrical systems;
4. corrosive action of detergents;
5. poor or non-functioning software or hardware or loss of data recorded by the purchaser as a result of storms, lightning, high temperature or voltage variations of the electric current, earthquakes, fire, etc.;

6. with reference to all the electrical components and mechanical plastic moving parts subject to normal wear, which must be replaced during routine maintenance;
7. where the products have been used in conjunction with or incorporated into equipment or materials whose specifications have not been approved in writing by the selling company;
8. tampering with the label showing the serial number of the machine;
9. fault or breakage due to transport, acts of vandalism, natural calamities or wilful damage;
10. wrong or bad installation of the product;
11. carelessness, negligence or lack of skill in using the product;
12. failure to comply with the operating instructions in the technical manual;
13. interventions for alleged defects or casual checks;
14. repairs carried out without our authorization.

Malfunctioning of the machine due to the software not being upgraded is not considered a defect. Comestero is not obliged in any way to upgrade the software free of charge or upgrade the mechanical components which may be necessary due to new coins or banknotes being introduced by the Italian and European authorities, when repairing a product that is covered by the warranty. However, such upgrades could still be requested from Comestero and the company is obliged to send a quotation to the customer prior to intervention.
Any repair or tampering carried out on the supplied goods by subjects who are not authorized by us will render the warranty null and void.
We declare to have carefully considered, to the best of our knowledge and manufacturing practices, the issue related to preventing the goods supplied from being violated by persons who intentionally intend to alter their operation. However, we shall no assume any liability for illegal conduct or damage that may result fraudulent use of the goods supplied. All required repairs not covered by the warranty must be paid for and the Comestero price list shall apply whose updates are regularly communicated.

ART. 4 – Limitation of Liability

Notwithstanding the hypotheses in art. 1229 of the Italian Civil Code and notwithstanding the mandatory provisions of law, for every damage caused directly or indirectly by failures or delays of the Seller or by the purchased products to objects or persons, including but not limited to lost profits and damage to the corporate image, the compensation payable by the Seller shall not exceed, in any case, 10% of the amount paid by the Purchaser for the product that caused the damage.

ART. 5 – Delivery

The goods subject of the supply are considered delivered at the time and in the place they are passed on to the carrier; therefore, our company shall not be held liable for total or partial shortages, damage or delays related to transport. Upon delivery, the recipient must duly note any errors or damage on the bill of lading. The Purchaser's refusal to accept or collect all or part of the ordered goods does not suspend obligation to pay. The terms of delivery indicated in the order confirmation allow for a

grace period of 60 days. Upon delivery, the Purchaser must carry out a complete technical verification of the quality and functionality of the product within eight days. If not, the product shall be considered accepted without reservations or objections by the Purchaser.

ART. 6 - Retention of Title

The supplied goods shall remain the property of our company until full payment of the price has been made. In the event of termination of the contract for non-payment, the Seller is entitled to claim the unpaid items held by the Purchaser, which must be returned at the Purchaser's expense. All sums already paid will be retained by the seller as compensation and penalty.

ART. 7 – Terms of payment

Invoices must be paid in accordance with the agreements and within the deadline specified on the invoice. Any delay in payment will automatically result, without the need of formal notice, the application of interest at the rate stipulated in Legislative Decree no. 231 of 9.10.2002, unless agreed otherwise. If the purchaser delays, each benefit in the terms and conditions that may have been granted shall be deemed null and void and the seller may demand immediate payment of all outstanding amounts as well as of additional orders on receipt of the goods.

ART. 8 – Returns

Return of faulty goods or of goods requiring our assistance must be expressly authorised by us. Therefore, we reserve the right to reject the return or ask you to return the good to another destination other than our headquarters. We shall be liable for the goods only when it will be delivered to the indicated address.

ART. 9 - Applicable law and court of jurisdiction

The supplies regulated by these general terms and conditions are governed by Italian law. Any dispute shall be resolved by the Court of Milan.

Dear customer,
Thank you for choosing a Comestero product; by carefully following the indications of this instruction manual, you will be able to appreciate over time, and with much satisfaction, the quality of our equipments.
Please read the use and maintenance instructions carefully and comply with all safety precautions before using the equipment. Keep this manual for future reference.

Contents

Contents **9**

1. Introduction **10**

2. Product description **10**

3. Warnings **10**

4. Handling and unpacking **11**

4.1 Delivery of the packaged product 11
4.2 Handling 11
4.3 Unpacking 12
4.4 Dimensions and names of the parts 12
4.5 Equipment identification 13

5. Installation **14**

5.1 Installation 14
A. Mechanical configurations *14*
B. Front panel *15*
5.2 Connections 17
A. Connection of the cc Talk version (Giochi Italia and Full) *17*
B. Connection of the cc Talk version with separator (Game Italy and Full) *18*
C. Connection of the parallel validator version *18*
D. Connection of the parallel validator version with separator *19*
E. Connection of the Totalizer version *20*
F. Connection of the Totalizer version with separator *20*
G. Connection of the Virtual Dip Switch *21*
H. Connection to a PC *22*
I. CN3 USB connector (optional) *23*
L. LED *23*

6. Settings **23**

6.1. Configuration 23
A. Configuration by means of VIRTUAL DIP SWITCH (optional) *23*
B. Configuration by means of Multiconfig programme *24*
6.2. Types of Configuration 25
A. ccTalk validator configuration *25*
B. Spagna validator configuration *29*
C. Binary validator configuration *29*
D. Confida binary validator configuration *30*

7. Care and maintenance **31**

7.1 Maintenance and external cleaning 31
7.2 Maintenance and internal cleaning 32

8. Diagnosis and technical assistance **32**

9. Technical data **33**

10. Annexes **34**

10.1 Decommissioning and disposal 34

EN

1. Introduction

This manual and its annexes provide all the necessary information for a correct installation of the product and all its components, as well as for its correct use and maintenance. The information contained in this manual can be modified without prior notice and do not constitute a commitment on behalf of Comestero. Please refer to our website at http://www.comesterogroup.com/cms/download.html to download the latest version of this manual.
The information contained in this manual has been collected and verified with the utmost care; however, Comestero has no liability arising from its use. Unless otherwise stated, any reference to companies, names, dates, and addresses is purely coincidental and has the sole purpose to illustrate the use of the product. The reproduction of any part of this manual without prior authorisation by Comestero is prohibited.

2. Product description

RM5 HD is the state of the art electronic coin validator resulting from Comestero research in the field of coin recognisers, which are becoming increasingly safe and reliable. This equipment featuring an innovative design offers the highest performance in terms of recognising legal coins and detecting false ones. The special design of the drop duct has allowed for a significant reduction of the time taken by the coin to travel inside the mechanism, in order to allow the recognition of 6 coins per second. The sophisticated recognition system consists of 5 sensors (3 inductive, 1 optical and 1 magnetic) and is based on the comparison with 10 parameters. RM5 HD is equipped with new state of the art anti-fraud system: Electronic detection of the retrieving wire, electronic detection of the coin movement direction, 3 mechanical traps along the coin duct and wire-cutting blade. The innovative construction and materials, together with the anti-knock ABS make RM5 HD sturdy and resistant over time.

3. Warnings

Read this manual carefully before installation. The indications and information contained in this manual are essential for a correct use of the product. Upon receiving your product, make sure it has not been damaged during transport.
Pay attention to the electrical connections. Faults and malfunctions deriving from non-compliance with the instructions contained in this manual are not covered by guarantee.
In this document, symbols are used to highlight important aspects that must be carefully observed.

4. Handling and unpacking

4.1 Delivery of the packaged product

Upon receiving your product, make sure it has not been damaged during transport. Should you notice damage of whatever nature, contact the delivery company and immediately file a complaint.

Following transport, the package must be intact, i.e., it must *not* show :

- dents, signs of knocks, deformation or rupture of the packaging.
- wet or damp patches or signs which indicate that the package has been exposed to rain, frost or heat.
- signs of tampering.

Also, make sure that the content of the packaging corresponds to your order.

EN

Fig. 1

4.2 Handling

To prevent any damages to the equipment, we recommend handling it inside its original packaging.
After a first inspection, reinsert the equipment in its packaging to bring it to its point of installation.

We recommend:

- not to knock the equipment.
- not to leave the equipment exposed to weather agents (even if inside its packaging).

4.3 Unpacking

The equipped machine is delivered following commissioning in two types of packaging according to the number of RM5 HD coin validators required: a multiple-unit (20) packaging (Fig.2) or a single-unit packaging.
Both packaging consist of corrugated cardboard. The packaging materials contained in it are made to meet the standards regarding recycling and disposal (as for disposal, follow the regulations in force in your country).

Fig. 2

4.4 Dimensions and names of the parts

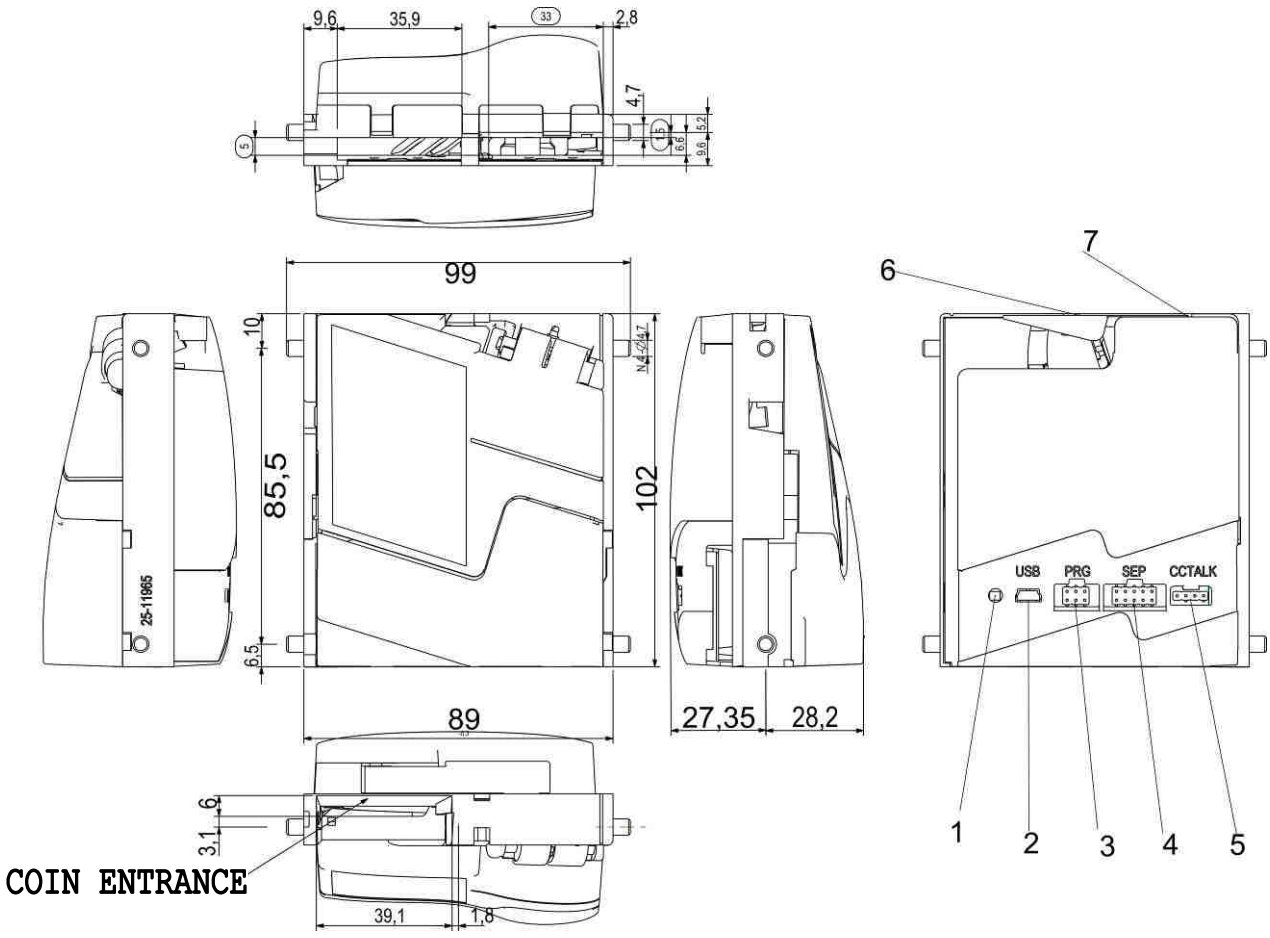

Fig. 3

1 Led indicator
2 CN3 USB connector (optional)
3 J1 Virtual Dip Switch connector
4 CN1 separator parallel connector (ccTalk)
5 ccTalk connector
6 Door opening device
7 Coin inlet (version G)

4.5 Equipment identification

The figure shows the label affixed on the coin mechanism, which contains the main equipment operation and identification information.
For an easy identification of the coin validator i.e., its configuration (operation mode) and calibration (type of accepted coins), please find below a graphic representation of the labels affixed on the various models.

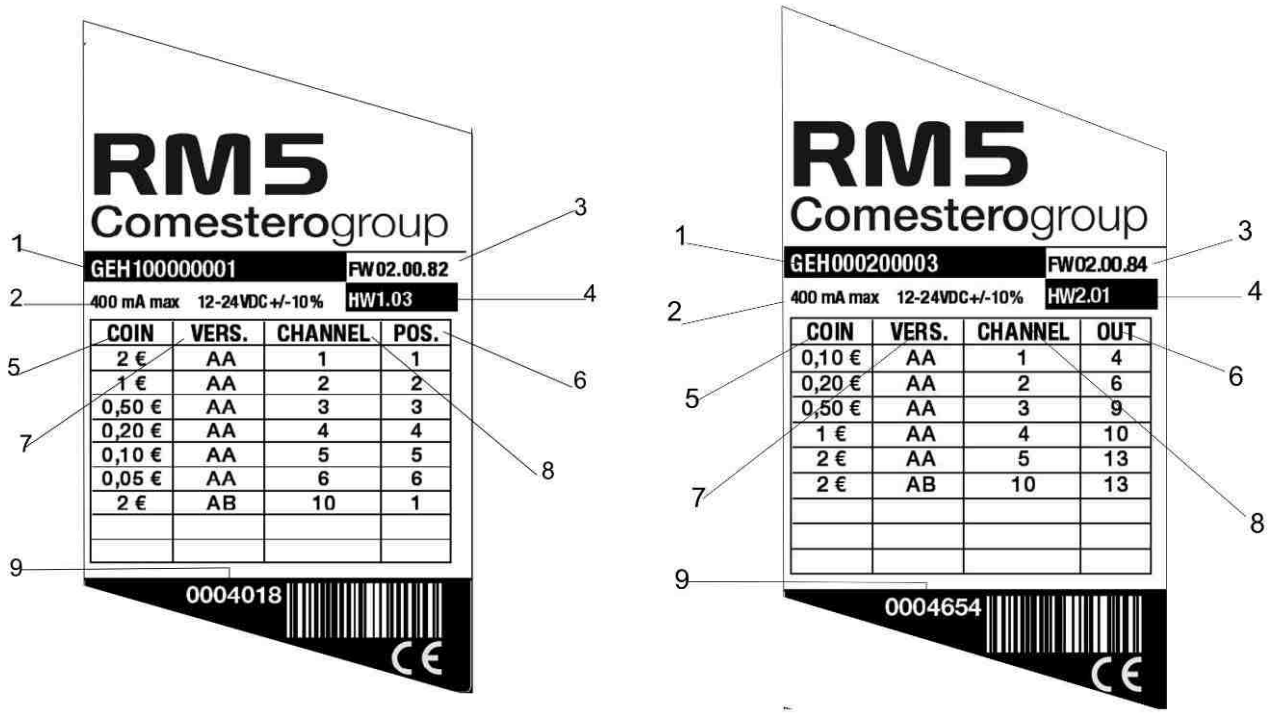

ccTalk version (A) **Validator version (B)**

Fig. 4

1 Coin mechanism code
2 Power supply
3 Firmware version
4 Hardware version
5 Accepted coins
6 *(ccTalk version)* Coin position inside the events buffer (ccTalk) (A)
6 *(Validator version)* Outlet duct (B)
7 Calibration version
8 Channel onto which the coin is calibrated
9 Serial number

5. Installation

5.1 Installation

A. Mechanical configurations

RM5 HD is available in two versions.

- Version A, optimised for Euro, accepts coins with a maximum diameter of 27 mm. and a maximum thickness of 2,4 mm.
- Version B, accepts coins with a maximum diameter of 31,5 mm and a maximum thickness of 3,4 mm.

Each of these two versions is available in four different models in order to meet any installation requirement.

Model	Coin inlet	Coin refusal
F	Upper or front	Front
V	Upper	Front
B	Upper or front	Lower/front
G	Upper	Lower/rear

The figures in the page that follows show the different coin travel paths in the four models.

Available coin validator versions	
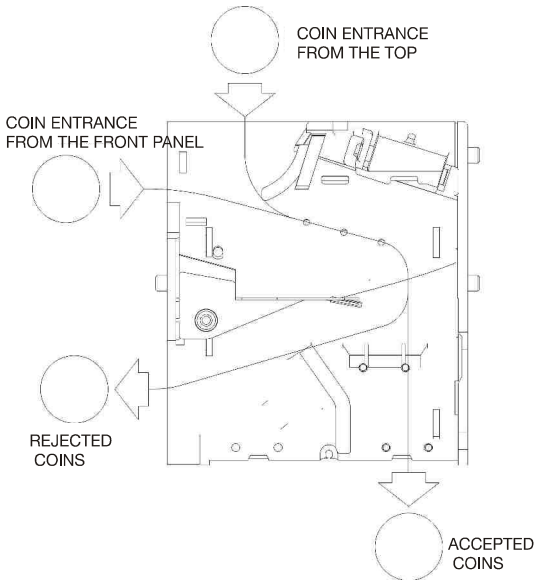	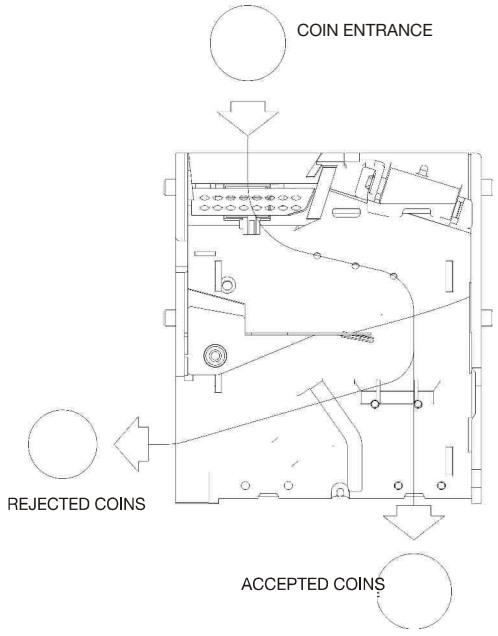
Version F	**Version V**

Available coin validator versions

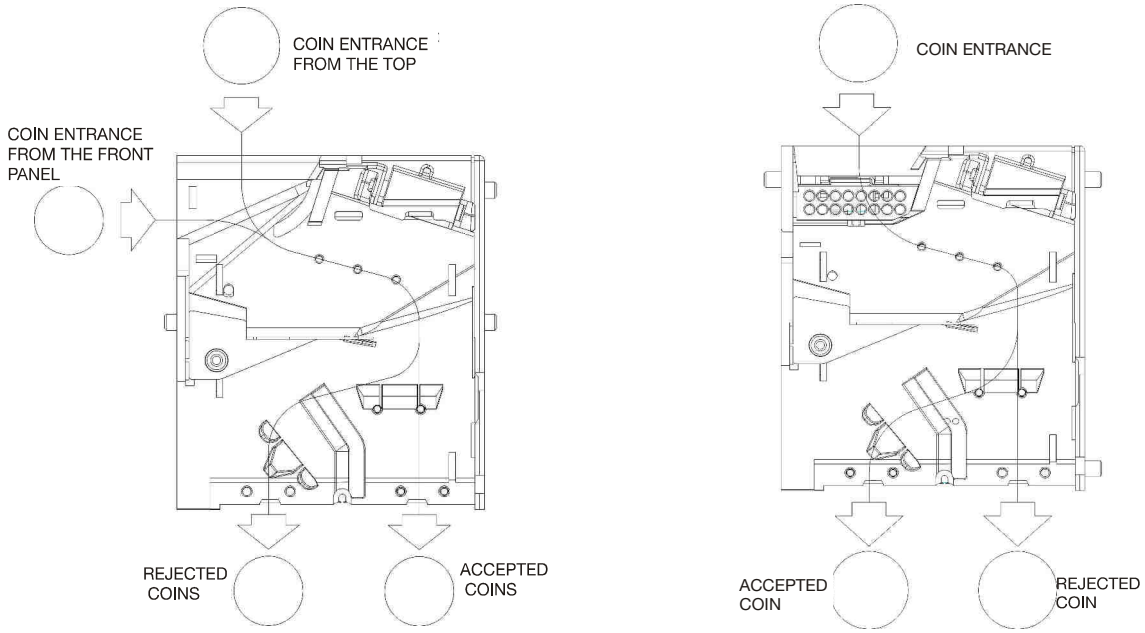

Version B	Version G

EN

B. Front panel

RM5 HD is compatible with F1 and F6 front panels and can be mounted either on the front or the rear of any machine. For details regarding installation, follow the instructions on the leaflet attached to each plate.

B.1 Front Panel F1

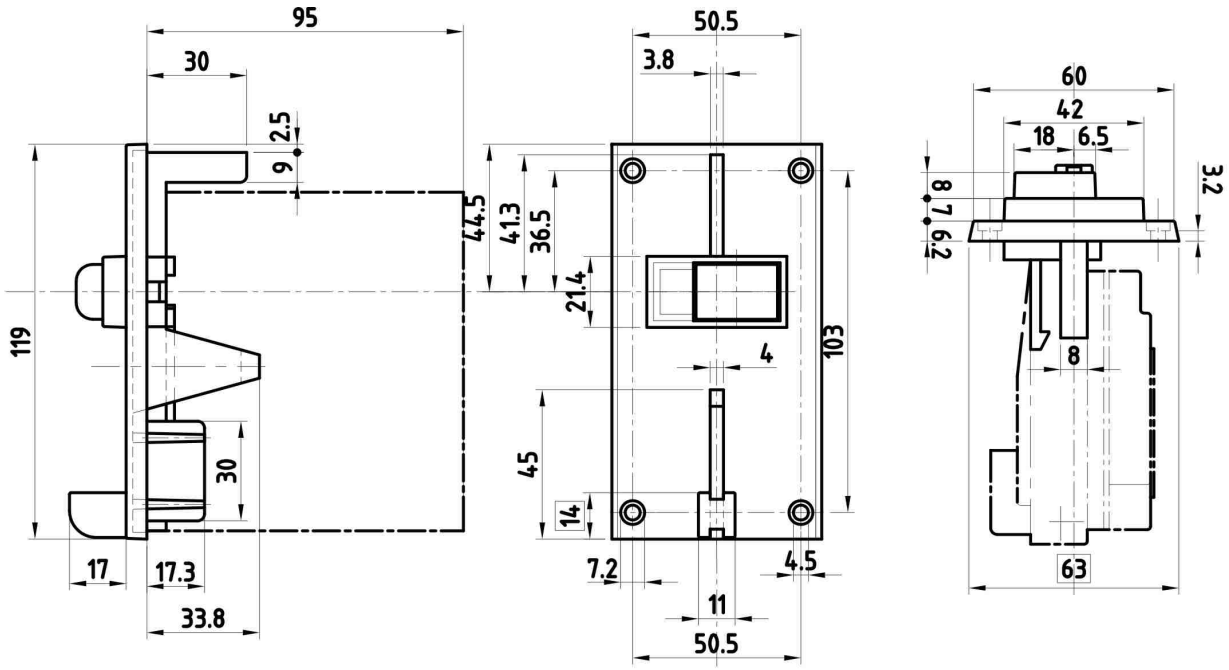

Fig. 5

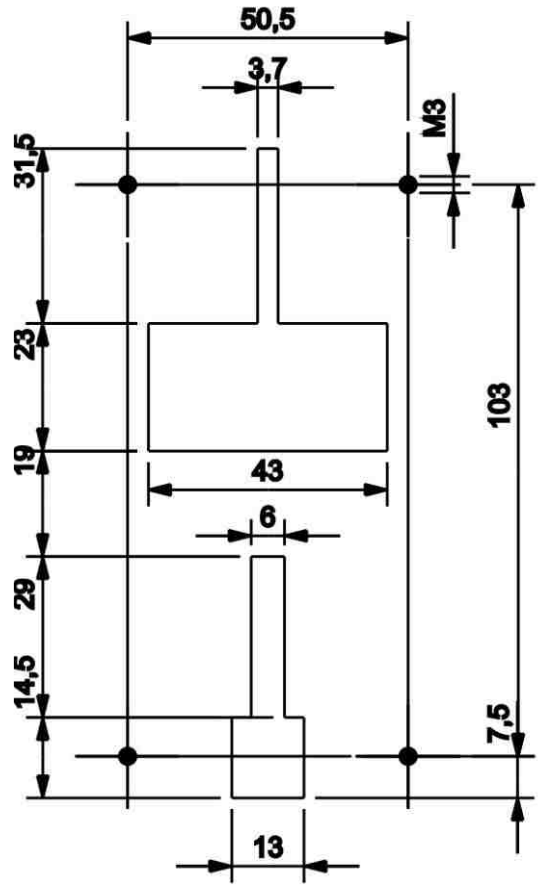

HOLES FOR FRONT PANEL F1

Fig. 6

B.2 Front panel F6

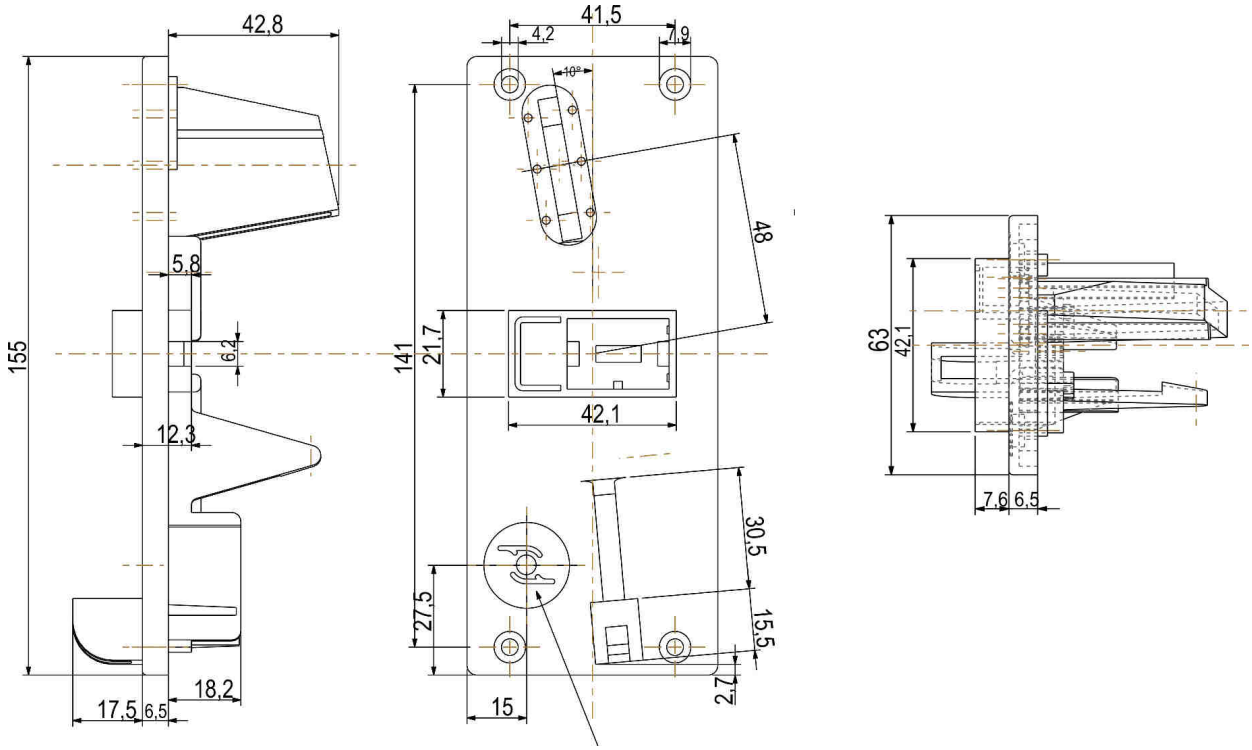

Fig. 7

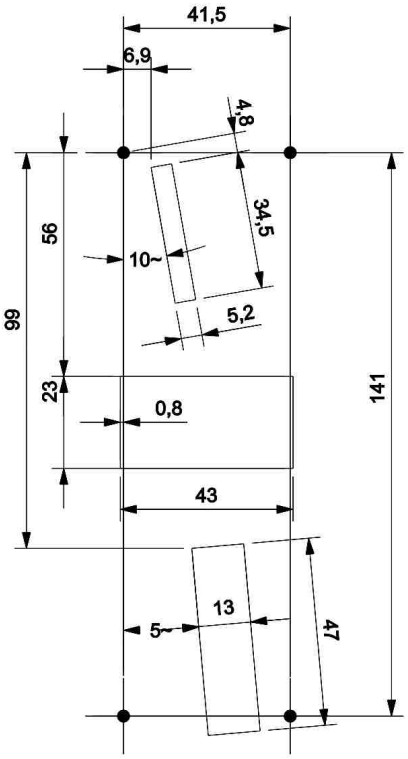

HOLES FOR FRONT PANEL F6

Fig. 8

EN

5.2 Connections

The following paragraphs provide the necessary information for all RM5 HD connections by means of the connectors with which it is equipped.
RM5 HD is available in 3 versions. ccTalk (Giochi Italia and Full), Validator and totalizer.
Follow carefully the instructions below to ensure a correct connection for these three versions.

A. Connection of the cc Talk version (Giochi Italia and Full)

Connect the ccTalk (Giochi Italia and full) version of the RM5 HD coin mechanism to the machine CPU by means of the (CN2) ccTalk connector as shown below.

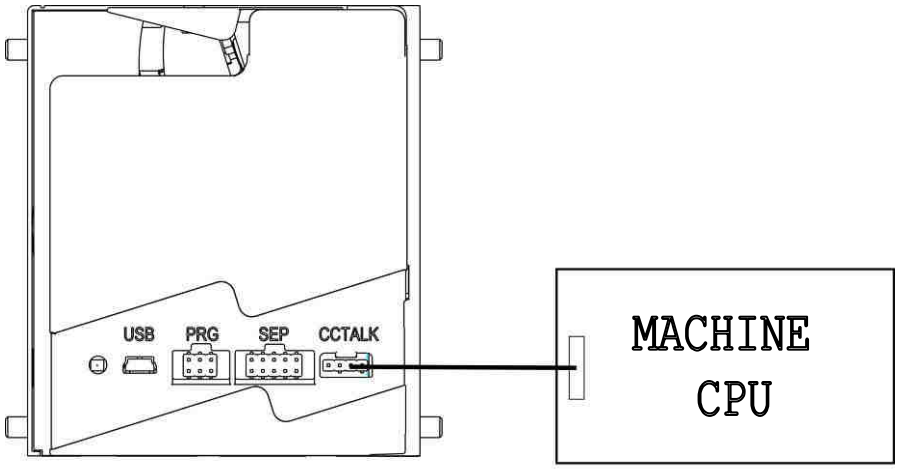

Fig. 9

Below is the pin numbering for the interested connector:

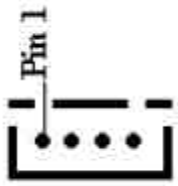

Pin number	Meaning
1	+V
2	N.V. (not used)
3	0 V
4	Date

B. Connection of the cc Talk version with separator (Game Italy and Full)

In presence of a separator, connect the RM5 HD coin mechanism to the machine CPU by means of the (CN2) ccTalk connector and to the separator by means of (CN1) “SEP” connector, as shown below.

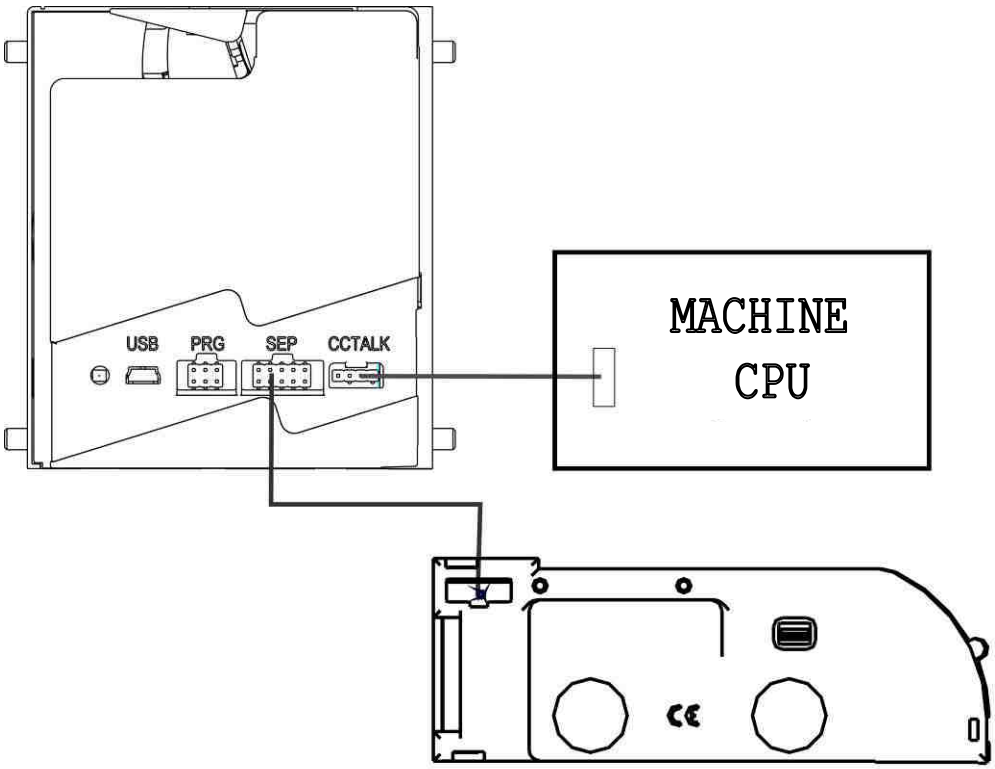

Fig. 10

Below is the pin numbering for the interested connector:

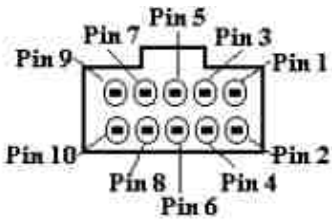

Pin number	Meaning	Pin number	Meaning
1	Gnd.	6	Inhibition
2	+12-24Vdc	7	-
3	B1	8	-
4	B2	9	-
5	B3	10	-

C. Connection of the parallel validator version

Connect the parallel validator version of the RM5 HD coin mechanism to the machine CPU by means of the (CN1) “SEP” connector as shown below.

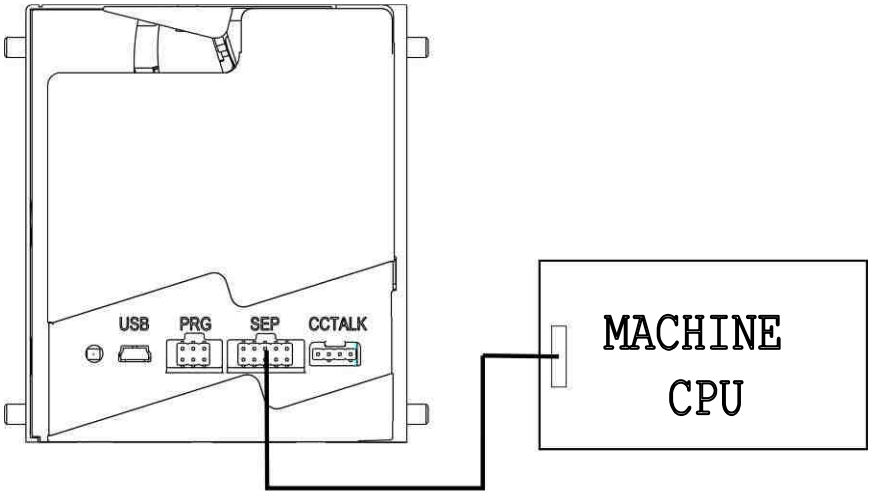

Fig. 11

Below is the pin numbering for the interested connector:

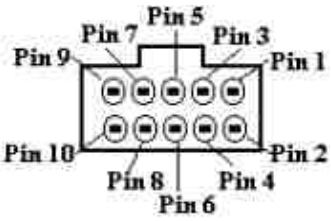

Pin number	Meaning	Pin number	Meaning
1	Gnd.	6	Inhibition
2	+Vcc	7	CH1
3	CH 5	8	CH 2
4	CH 6	9	CH 3
5	CH 7	10	CH 4

EN

D. Connection of the parallel validator version with separator

In presence of a separator, connect the RM5 HD coin mechanism to the machine CPU by means of (CAN) “SEP” connector, then connect the separator to the machine CPU.

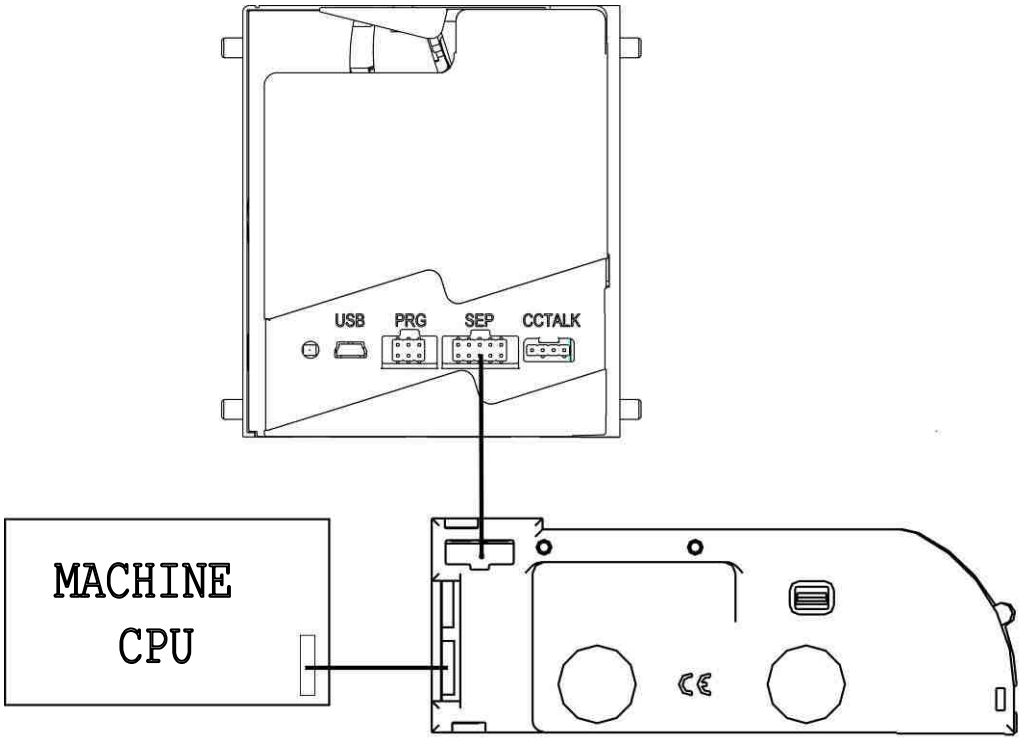

Fig. 12

Below is the pin numbering for the interested connector :

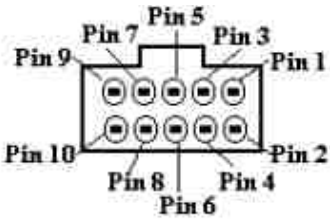

Pin number	Meaning	Pin number	Meaning
1	Gnd.	6	Inhibition
2	+Vcc	7	CH 1
3	B 1	8	CH 2
4	B 2	9	CH 3
5	B 3	10	CH 4

E. Connection of the Totalizer version

Connect the totalizer version of the RM5 HD coin mechanism to the machine CPU by means of the (CN1) “SEP” connector as shown below.

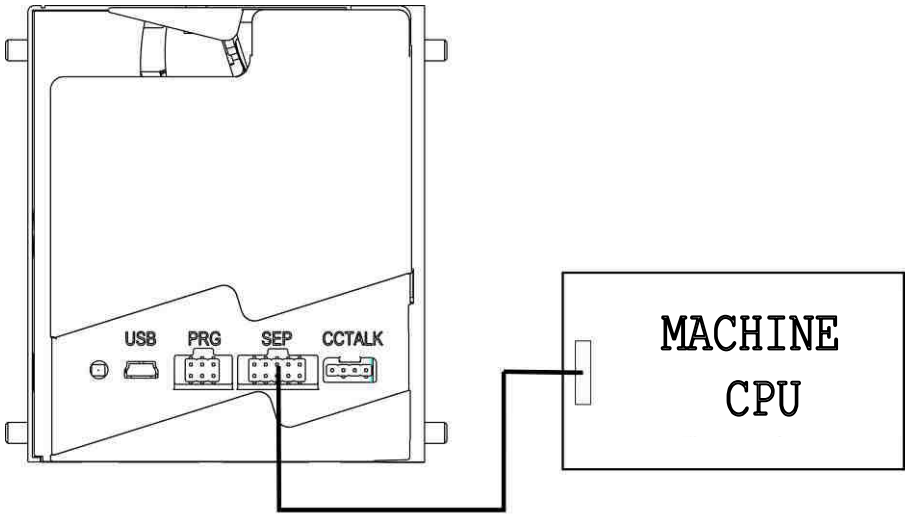

Fig. 13

Below is the pin numbering for the interested connector :

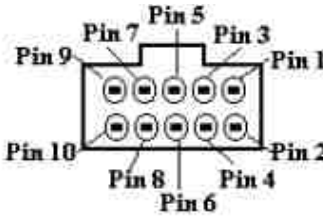

Pin number	Meaning	Pin number	Meaning
1	Gnd	6	Inhibition
2	+Vcc	7	-
3	-	8	CM coin counter (default)
4	-	9	CR credit (default)
5	-	10	-

Note:
Both the coin counter and the credit can be redirected to any pin chosen by the user from 7 to 10.
Standard factory settings are those set as Default.

F. Connection of the Totalizer version with separator

In presence of a separator, connect the RM5 HD coin mechanism to the machine CPU by means of (CN1) “SEP” connector, then connect the separator to the machine CPU.

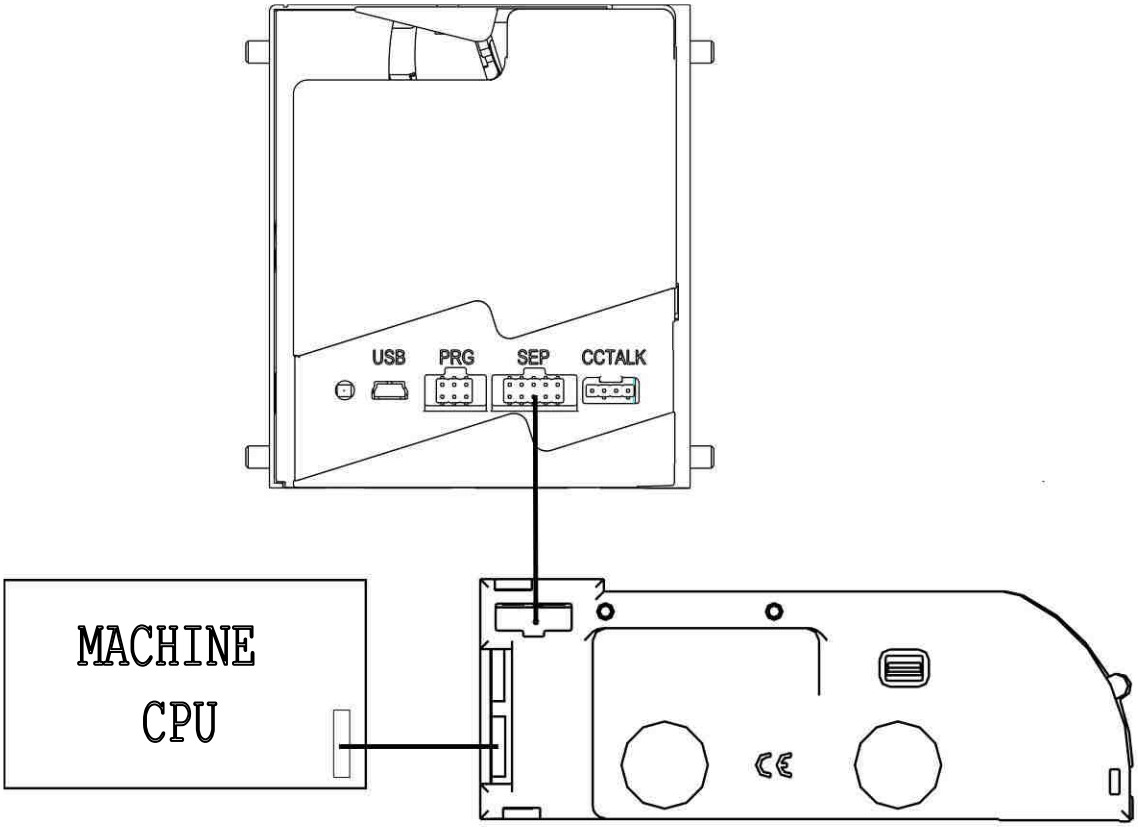

Fig. 14

Below is the pin numbering for the interested connector :

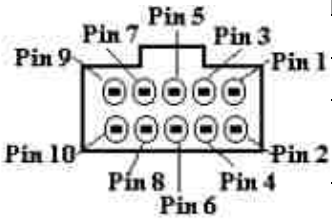

Pin number	Meaning	Pin number	Meaning
1	Gnd	6	Inhibition
2	+Vcc	7	-
3	-	8	CM coin counter (default)
4	-	9	CR credit (default)
5	-	10	-

Note:
Both the coin counter and the credit can be redirected to any pin chosen by the user from 7 to 10.
Standard factory settings are those set as Default.

G. Connection of the Virtual Dip Switch

Each RM5 HD electronic coin mechanism, whatever its configuration, has an implemented serial output for the connection of the Virtual Dip Switch, which allows a basic configuration of the coin mechanism (see Chapter 6).

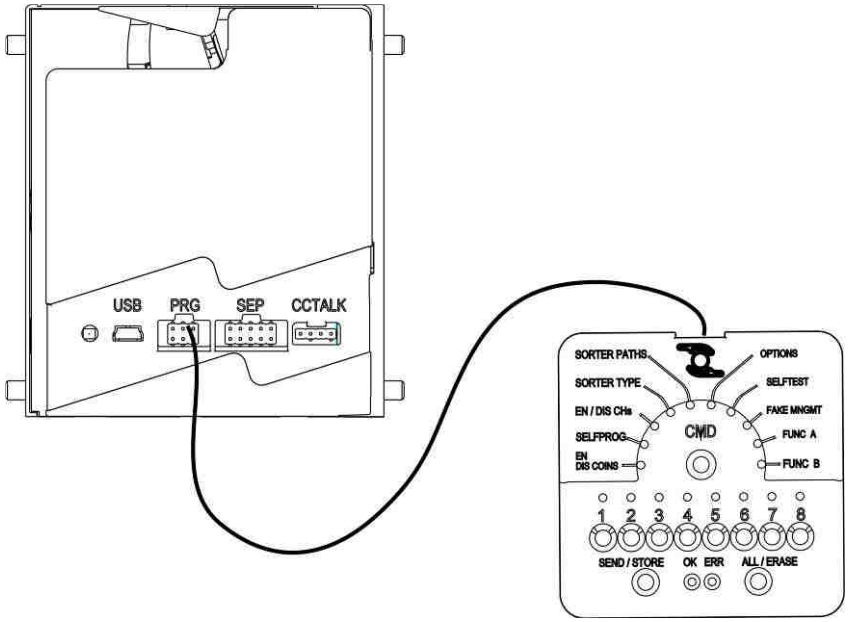

Fig. 15

Below is the pin numbering for the interested connector :

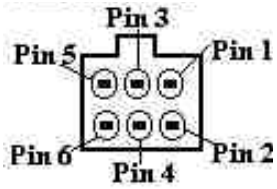

Pin number	Meaning	Pin number	Meaning
1	Gnd	4	RX
2	+ 5 Vdc	5	N.U.
3	TX	6	N.U.

H. Connection to a PC

RM5 HD can be connected to a PC by means of a (CN2) ccTalk connector. This connection allows configuring RM5 HD in all its functions by means of the Multiconfig programme (see Chapter 6).

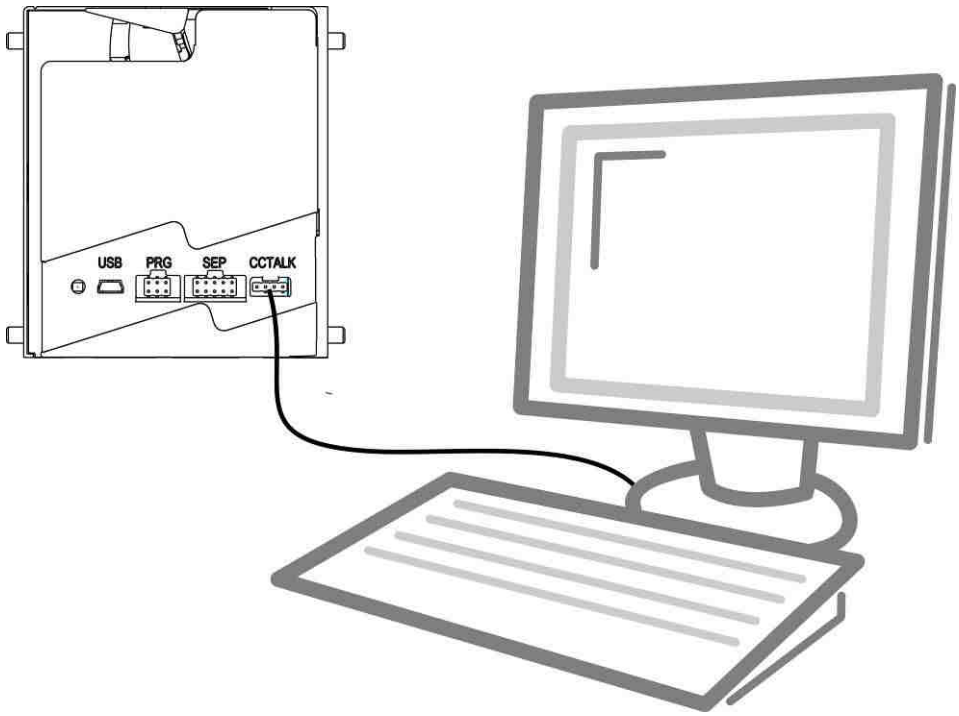

Fig. 16

Below is the pin numbering for the interested connector :

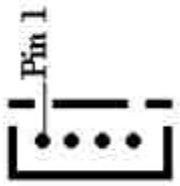

Pin number	Meaning
1	+V
2	N.V.
3	0 V
4	Date

I. CN3 USB connector (optional)

When installed, it allows connecting the coin mechanism to boards or to a PC by means of a USB cable.

L. LED

All RM5 HD coin mechanisms are equipped with a led, which provides the following information on the status and diagnostics through light pulses.

Light indication	Meaning
2 red pulses and 2 green pulses	ON
Red flashing	A problem occurred
Orange pulse	Recognised coin but not enabled
Green pulse	Recognised coin accepted
Red pulse	Coin recognised as false and discarded

6. Settings

6.1. Configuration

Configurating the RM5 HD coin mechanism means setting the operation mode most suited to the user's requirements. Configuration allows, for example, carrying out operations such as self-learning, modifying dip switches or some operating parameters
RM5 HD can be configured by means of the mobile Virtual Dip Switch device for a basic configuration, or by means of the PC Multiconfig configuration programme, which allows a complete configuration in all aspects.

A. Configuration by means of VIRTUAL DIP SWITCH (optional)

RM5 HD can be configured on the field using the Virtual Dip Switch, by connecting the latter to the "PRG" (3) connector and following the instructions provided.
Virtual Dip Switch is a mobile device that allows carrying out the basic configuration functions directly on the field without having to disinstall the coin mechanism from the machine.
Thanks to its button and LED graphical interface, the Virtual Dip Switch allows:

- Enabling/disabling all the coins with the same value

Allows activating or deactivating the acceptance of one or more coins.

- Starting up a Selfprog procedure

The selfprog procedure teaches the RM5 HD to recognise one or more coins that are different than those set by default.

- Enabling/disabling each of the 62 calibration channels with which RM5 HD is provided

Allows activating/deactivating the acceptance of the same coins but of different nationality, such as Euro coins of the various EU countries.

- Selecting the type of separator associated with the coin mechanism

Allows selecting the type of separator managed by the RM5 HD among a list of the most common models on the market.

- Modifying the separation of the first 8 coins

Allows managing the separation channels of the separator associated with the RM5 HD.

- Enabling/disabling some RM5 HD operation options

a) Modifying the level with which to electrically inhibit the RM5 HD.
b) Inhibiting/activating recognition of coins with hole.
c) Teaching RM5 HD to recognise a false coin.
d) Inhibiting/activating the anti-fraud devices with which RM5 HD is provided.

- Starting up the Self test function

The Selftest function allows RM5 HD to start up a self-diagnosis procedure, indicating any anomaly by means of the Virtual Dip Switch LED interface.

- Counterfeit management

Allows setting every single calibration channel as “authentic coin” or “false coin” in for managing counterfeit currency.

For further information on Virtual Dip Switch and for instructions on how to use it, please consult its operating manual.

B. Configuration by means of Multiconfig programme

Multiconfig is the configuration programme available for free download on our website
This programme allows a complete configuration of the RM5 HD, setting all the operation modes and parameters.
Before starting Multiconfig up, connect RM5 HD to your PC by means of the ccTalk connector (5).

Multiconfig is provided with an on-line manual that guides the user through the various functions.

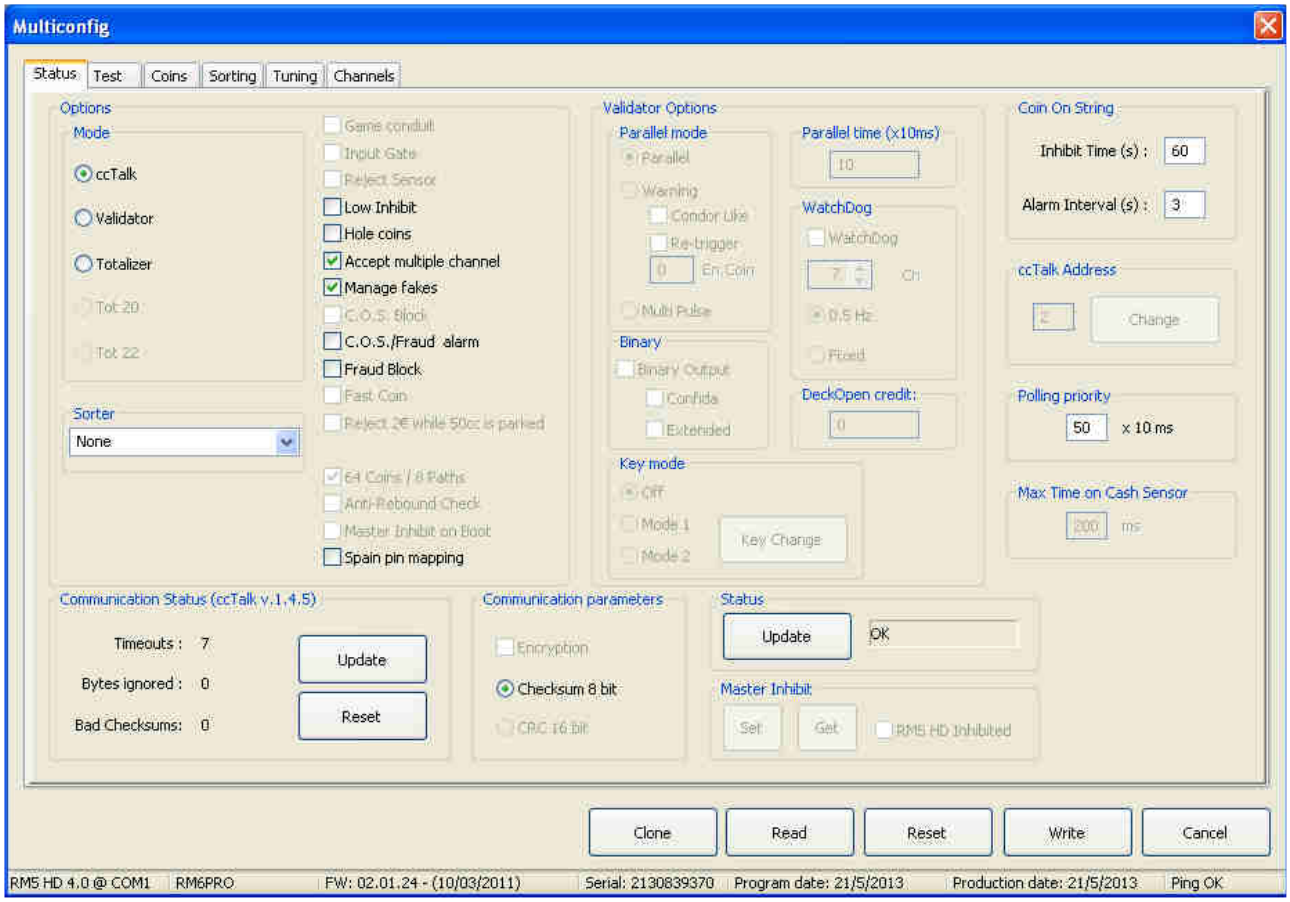

Fig. 17

6.2. Types of Configuration

RM5 HD can be configured by means of Virtual dip Switch or multiconfig programme, according to the requirements. The main configurations are listed below.

A. ccTalk validator configuration

In ccTalk protocol validator configuration, RM5 HD can manage up to 16 different coin values. The coin mechanism will respond to serial controls described below.
ccTalk is a serial communication protocol which provides an optimal balance between information simplicity and security. This protocol has been especially designed for the GAMING industry. It consists in a high number of specific controls, aiming at a considerable control flexibility of a control unit called Host. (Machine specifications).
It is designed to allow interconnecting various money treatment devices, simply by means of a serial cable shown below.
The use of the controls is free according to the type of application and requirements. In any case, all strategies and supervision are carried out by the Host.

The type of connection is called Multidrop, where only the Host can “Ask”, all devices “Listen” and only the addressed device “Responds”. Communication is of “half duplex” type i.e., either the request or the response (never both at the same time) can be present on the line (full – duplex).

EN

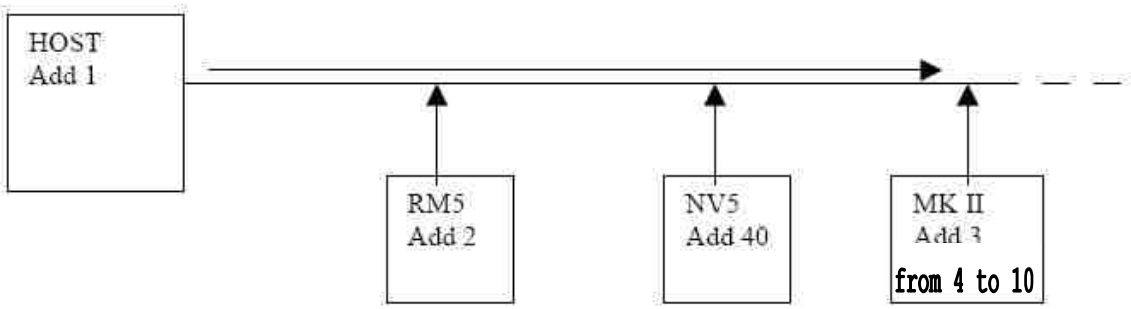

Fig. 18

The protocol provides no procedure to manage peripheral devices. This is left to the common sense of the Host programmer. For example, to avoid replacing the coin mechanism or any other device, it may be sufficient that, when started up, the machine interrogates its peripheral device about serial numbers, product code, manufacturer code, etc. If all the information received from the peripheral devices corresponds with the information stored in the host, all activities may continue, otherwise they may be inhibited and the necessary measures will be taken. RM5 HD implements the controls described below.

The table below shows two different sets of controls for the ccTalk Giochi Italia and ccTalk other configurations (Full) versions.

Header	Custom	Control	Gaming-ITALIA	Other Config.
1		Reset device	X	X
2		Request comms status variables	X	X
3		Clear comms status variables	X	X
4		Request comms revision	X	X
169		Request address mode	X	X
170		Request base year	X	X
183		Upload window data		X
184		Request coin id	X	X
185		Modify coin id		X
188		Request default sorter path	X	X
189		Modify default sorter path[1]	X	X
192		Request build code	X	X
193		Request fraud counter	X	X
194		Request reject counter	X	X
195		Request last modification date	X	X
196		Request creation date	X	X
197		Calculate ROM checksum	X	X
198		Counters to EEPROM[2]	X	X
201		Request teach status		X
202		Teach mode control		X

[1] Stored in Flash
[2] Stores the current counter values in flash

Header	Custom	Control	Gaming-ITALIA	Other Config.
209		Request sorter paths	X	X
210		Modify sorter paths[3]	X	X
212		Request coin position	X	X
213		Request option flags	X	X
214		Write data block		X
215		Read data block		X
216		Request data storage availability		X
221		Request sorter override status	X	X
222		Modify sorter override status[4]	X	X
225		Request accept counter	X	X
226		Request insertion counter	X	X
227		Request master inhibit status	X	X
228		Modify master inhibit status[5]	X	X
229		Read buffered credit or error codes	X	X
230		Request inhibit status	X	X
231		Modify inhibit status[6]	X	X
232		Perform self-check	X	X
233		Latch output lines	X	X
236		Read opto states	X	X
237		Read input lines	X	X
238		Test output lines	X	X
240		Test solenoids	X	X
241		Request software revision	X	X
242		Request serial number	X	X
243		Request database version	X	X
244		Request product code	X	X
245		Request equipment category id	X	X
246		Request manufacturer id	X	X
248		Request status	X	X
249		Request polling priority	X	X
250		Address random	X	X
251		Address change	X	X
252		Address clash	X	X
253		Address poll	X	X
254		Simple poll	X	X

Identification data

Below are indicated the responses to the following ccTalk controls.

Control	Meaning	Gaming-ITALIA	Other Config.
246	Req. manufacturer id	CMG	CMG

[3] The “Gaming Italia” version stores in RAM 1 sorter path for each of the 16 possible CoinID, while the “Other Config.” version stores in FLASH 4 possible sorter path for each of the 16 possible CoinID
[4] The override status is stored in RAM
[5] The master Inhibit is stored in RAM
[6] The inhibit status is stored in RAM .

Control	Meaning	Gaming-ITALIA	Other Config.
245	Req. equipment	Coin acceptor	Coin acceptor
244	Req. product code id	RM5 XCC	RM5 HDC
192	Req. build code	RM5 HD XY	RM5 HD XY

Note :
X= Edition
Y= Revision

By means of control 232 (Perform self-check), the ccTalk and FULL versions of the RMD HD returns the events buffer, the result is reported on two byte as described in the following table:

Data byte 0	Data byte 1	Meaning
0x00	0x00	self-check OK
0x01	0x00	EEPROM checksum error
0x02	0xXX	Inductive coils error. Data byte 1 is a bitmask reporting which coil failed
0x03	0xXX	Coin output sensors error. Data byte 1 is a bitmask reporting which coin output sensor failed (cash/reject)
0x06	0xXX	Diameter sensors error. Data byte 1 is a bitmask reporting which diameter sensor failed

By means of control 229 (Read buffered credit or error codes), the ccTalk version of the RMD HD returns the events buffer, where the following error codes can be found in both ccTalk giochi Italia and ccTalk full versions:

ERROR DESCRIPTION	NUMBER	ERROR DESCRIPTION	NUMBER
REJECT COIN	1	CREDIT SEQUENCE ERROR	16
INHIBITED COIN	2	COIN GOING BACKWARD	17
MULTIPLE WINDOW	3	COIN ON STRING	20
VALIDATION TIMEOUT	5	CREDIT SENSOR REACHED TOO EARLY	23
CREDIT SENSOR TIMEOUT	6	REJECT COIN REPEATED	24
SORTER OPTO TIMEOUT	7	REJECT SLUG	25
2ND CLOSE COIN ERROR	8	REJECT SENSOR BLOCKED	26
SORTER NOT READY	11	INHIBITED COIN	128÷159
VALIDATION SENSOR NOT READY	13	FLIGHT DECK OPEN	254
CREDIT SENSOR BLOCKED	14	UNSPECIFIED ERROR CODE	255
SORTER OPTO BLOCKED	15		

B. Spagna validator configuration

In Spagna protocol validator configuration, RM5 HD can manage up to 6 different coin values i.e., up to 6 different outputs. Should the coin mechanism pilot a coin separator, the outputs will be only 4, since two of them are intended for piloting the separator.
Spagna Validators are coin mechanisms that, once the coin has been introduced and before giving the (settable) standard 100 msec. validation pulse, generate a 10msec warning pulse on the output corresponding to the set channel. During this lapse of time, the game board must decide whether to accept the coin. To do so, inhibition pin 6 is available on the coin mechanism. The board must keep this pin high (+ 5 Vdc, inhibition state). Following the insertion of a coin, the coin mechanism sends the warning signal to the machine, which, at this point, can decide whether to accept the coin, earthing PIN 6 (validator inhibition).

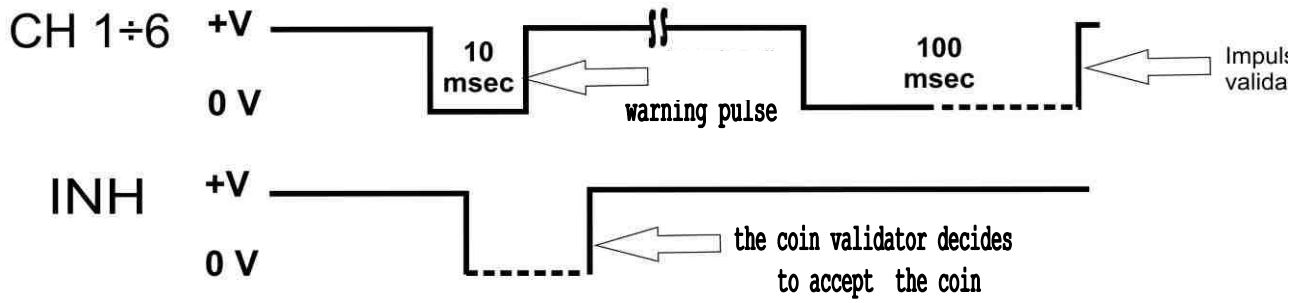

Fig. 19

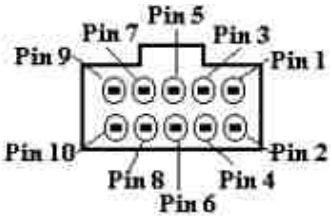

Pin number	Meaning	Pin number	Meaning
1	Gnd.	6	Inhibition
2	+12-24Vdc	7	CH 1
3	CH 5	8	CH 2
4	CH 6	9	CH 3
5	CH 7	10	CH 4

C. Binary validator configuration

In standard protocol validator configuration, RM5 HD can manage up to 15 different coin values i.e., up to 62 coins provided that they are redirected on the first 15 channels. Upon introduction of a coin, the validator will signal in binary code the channel on which the coin has been calibrated to the first 4 channels; at the same time, the “data valid” signal set on channel 6 is activated; the latter is activated at every coin introduction.

Output meaning :

In the next Figure 20, is graphically represent the meaning of the output.

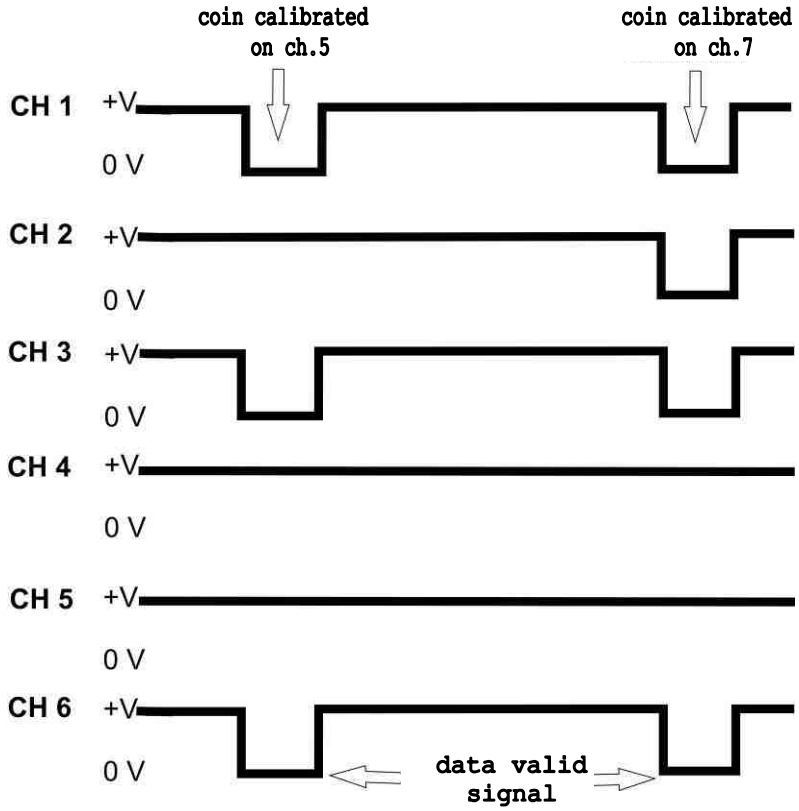

Fig. 20

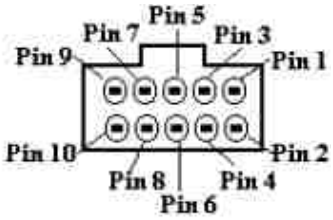

Pin number	Meaning	Pin number	Meaning
1	Gnd	6	Inhibition
2	+12-24Vdc	7	CH 1
3	N.U.	8	CH 2
4	Data Valid	9	CH 3
5	N.U.	10	CH 4

Note : In the event of a binary validator that can pilot a separator, the "data valid" signal corresponding to channel 6 will be omitted.

D. Confida binary validator configuration

In Confida binary validator configuration, RM5 HD can manage up to 15 different coin values i.e., up to 62 coins provided that they are redirected on the first 15 channels. Channel 1 is used to indicate the type of communication to the machine. If disabled (open collector), the validator will use a standard mode, whilst in enabled (Gnd), the validator will use the Confida combinatory mode. Channel 6 is used as even parity display to increase safety on the value of the combination transmitted to the validator. This way, always more than one line can be activated for each communication, allowing an easy identification of illegal combinations due to various reasons.

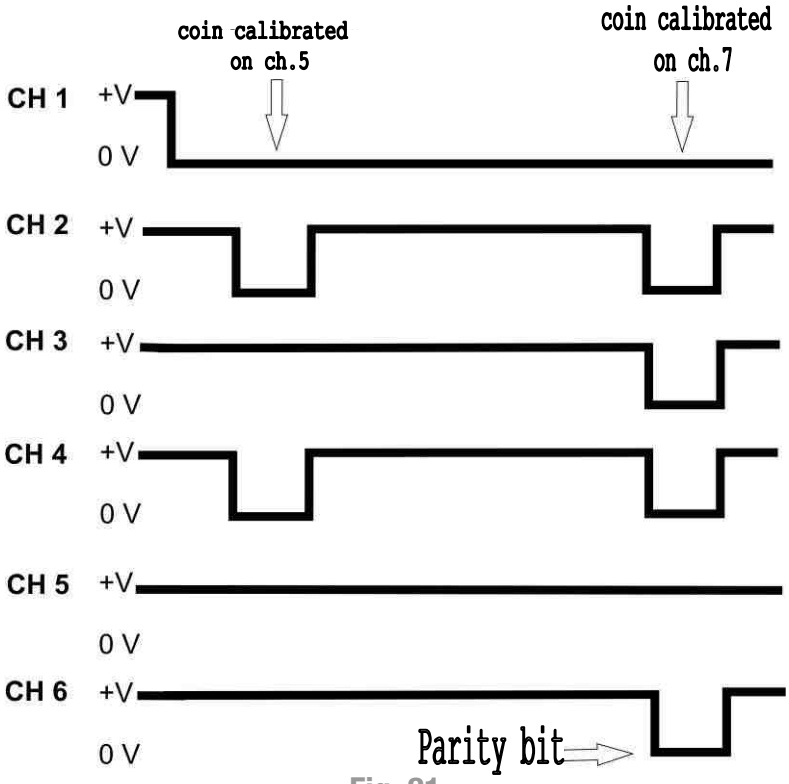

Fig. 21

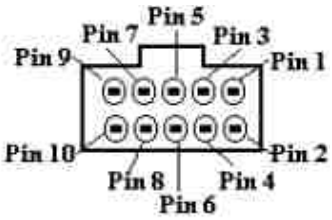

Pin number	Meaning	Pin number	Meaning
1	Gnd	6	Inhibition
2	+12-24Vdc	7	CH 1
3	N.U	8	CH 2
4	Parity bit	9	CH 3
5	N.U.	10	CH 4

7. Care and maintenance

All maintenance operations on the validator must be carried out when the machine onto which the validator is installed is disconnected from the power supply.

We strongly recommend following these instructions carefully in order to always keep the validator in the best operating conditions and to prevent dangerous situations that would make the guarantee void.

7.1 Maintenance and external cleaning

Always keep the external surfaces of the equipment clean; to do so, we recommend using a damp cloth or a mild detergent. In case of resistant dirt, clean the surface with

water and alcohol. Do not use aggressive petroleum or trichlorethylene-based chemical solvents, nor abrasive detergents or sponges that could damage the equipment.
Do not submerge in or expose the equiment to water or other liquids of whatever nature.
Regularly verify the equipment surfaces with special attention to those areas that, due to normal operation conditions, could represent a hazard for the user.

7.2 Maintenance and internal cleaning

The inside of the validator must be cleaned using compressed air only.
Regularly check the cable connections making sure the cables do not have points that are not insulated and are not excessively twisted. Should the cables or connectors present any anomaly, replace them immediately following the indications contained in the “Spare parts” manual.

8. Diagnosis and technical assistance

In this section are described the main anomalies that may occur using this product, with the possible solutions to minimise or eliminate machine downtime.

If the problem you are encountering is not described here or should the solution not solve it, please contact our after-sales service at: (+39) 02 95781111.

Problem	Possible cause	Solution
The validator is not functioning	The power supply connector may be disconnected	Make sure all the connections are firmly in place
Low coin acceptance	The optical sensors may be dirty	Clean the sensors with compressed air
The coins get stuck in the acceptance duct	Deposits of dirt or mechanical damage due to fraud	Check lifting the door
Authentic coins not accepted	Configuration error or coin not set	Refer to the Multiconfig on-line manual
No coin recognized	The power supply cable may be disconnected or the validator may be inhibited	Verify the configuration settings

9. Technical data

Dimensions (Lxlxh) [mm] :	102x99x55,5
Weight [g] :	200
Supply Voltage [Vdc] :	12÷24 (±10%)
Current consumption [mA] :	Stand by Max 70 In acceptance Max 400
Temperature range [°C] :	-25 ÷ +70
Not condensed humidity [%] :	10 ÷ 75

Accepted coins dimension

Minimum [mm] :	Ø 16,25 Ø 17
Maximum [mm] :	Ø 27 Ø 31,50
Acceptance speed (without sorter) :	Up to 6 coins/second

EN

10. Annexes

10.1 Decommissioning and disposal

At the end of its intended life, the product must be decommissioned and disposed of at a recycling site.

Remove the equipment from its installation site, empty all the coins out of it and remove the power supply cable. Contact your dealer to pick up the obsolete equipment.

This equipment must be disposed of in compliance with Legislative Decree No. 151 dated 25/07/2005.

Please read carefully the following information.

As of the 31st December 2006, specific guidelines regarding the disposal of electrical and electronic equipment (WEEE) have been established to protect the environment. This equipment falls into the scope of Legislative Decree 151/2005 Annex 1B art. 2 paragraph 1 being:

7.6 A coin / token machine
10.2 an automatic cash or vending machine

In summary:

- This equipment is not to be disposed of as unsorted municipal waste but must be disposed of separately.
- Dealers will pick up used equipment free of charge and take it to appropriate recycling centres for its correct disassembly and possible recovery of the used materials.
- Special centres have been specifically created for the disposal of electrical and electronic equipment (WEEE). The user can return this used equipment to his/her local dealer when purchasing a new equivalent machine.
- This equipment or parts of it may cause potentially hazardous effects on the environment and on human health if used improperly or if not disposed of in compliance with the procedure described above, due to the presence of some substances in the electronic components.
- The crossed-out wheeled bin symbol printed visibly on this equipment indicates that this product has been placed on the market after 13 August 2005 and must be disposed of separately.

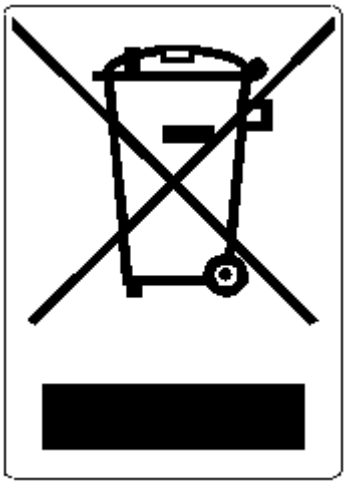

Sanctions in case of illegal disposal of such waste :

EN

1. The distributor who does not retrieve the used electrical or electronic equipment free of charge, as stated in art. 6, paragraph 1, letter b), will be fined between 150 and 400 Euros, for every equipment unretrieved or retrieved not free of charge.
2. Manufacturers who fail to provide a separate professional EEE disposal system in compliance with article 6 –paragraph 3, as well as EEE retrieval, handling, treatment and recycling systems according to article 8 - paragraph 1, article 9 – paragraph 1, 11 – paragraphs 1 and 12 – paragraphs 1, 2 and 3, notwithstanding for the latter operations, agreements concluded in compliance with article 12 – paragraph 6, will be fined between 30.000 and 100.000 Euro.
3. Any manufacturer who after the 13th August 2005 releases electrical or electronic equipment without financial guarantee in compliance with article 11 – paragraph 2 or art. 12 - paragraph 4, will be fined between 200 and 1,000 Euros for every machine released onto the market.
4. Manufacturers who in EEE use instructions do not provide the information as in article 13 – paragraph 1, will be fined between 200 and 5,000 Euros.
5. Manufacturers who, within one year from releasing a new type of EEE , do not make information available to disposal/recycling centres according to article 13 – paragraph 3, will be fined between 5000 and 30,000 Euros.
6. Manufacturers who, after the 13th August 2005, releases EEE without the indications and symbols as in art. 13, paragraphs 4 and 5, are fined between 200 and 1,000 Euros for each equipment released. The same fine is charged should the aforementioned indications and symbols are not conform to the requirements set by art. 13, paragraphs 4 and 5.
7. Manufacturers who releases EEE without having registered with the chamber of commerce in compliance with article 14 – paragraph 2, will be fined between 30,000 and 100,000 Euros.
8. Any manufacturer who, within the time limit established in article 13 – paragraph 8 does not communicate to the national registry concerning the disposal of EEE as stated in article 13 – paragraphs 3, 4 and 5 will be subjected to the foreseen sanctions.

9. Notwithstanding the exceptions as in article 5 – paragraph 2 , anyone releasing EEE containing substances listed in article 5- paragraph 1 after the 1st of July 2006, will be fined between 50 and 500 Euros for each unit released, or between 30,000 and 100,00 Euros.

COMESTERO

a SUZOHAPP company

Comestero Group S.r.l.
Via Marie Curie 8, 20060 Gessate (MI)
Tel : +39 02 95781111 Fax:+39 02 95 380178
www.comesterogroup.com - comestero@comesterogroup.it